Dimensions: mm (in.)

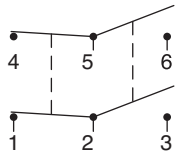

CIRCUIT DIAGRAM

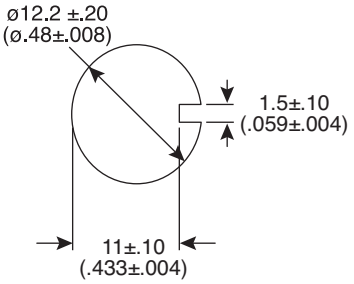

MOUNTING HOLE

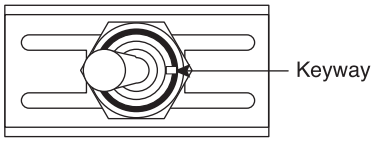

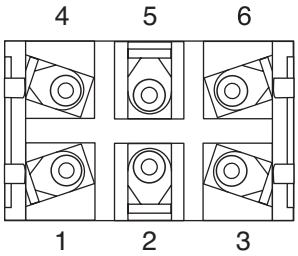

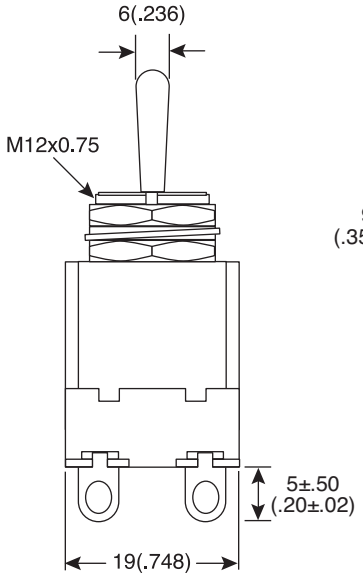

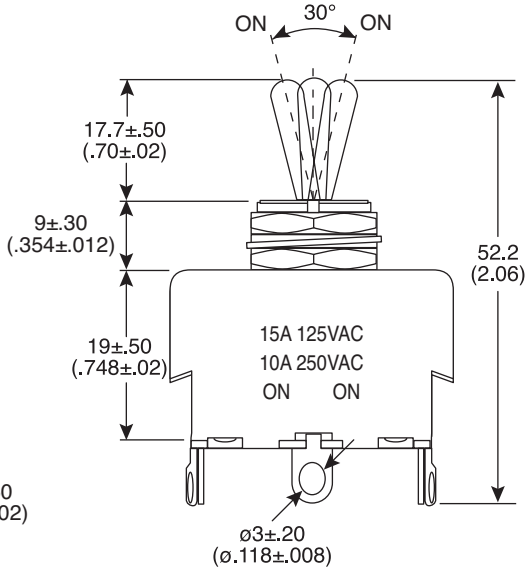

Electrical Specifications:

- Rating: 10A/250VAC; 15A/125VAC
- Contact Resistance: 50m Ω Max.
- Insulation Resistance: 500VDC 100M Ω Min.
- Dielectric Strength: 1500VAC 1 minute

Mechanical Specifications:

- Circuit: 6P DPDT on-on

Note:

- RoHS Compliant by Exemption

Toggle Switch

103-0013-EVX

Mountain Switch

Specifications are subject to change without notice. No liability or warranty implied by this information. Environmental compliance based on producer documentation.